Leading Particulars - Gazelle

MOD Form 701(Gazelle)(Army)
(Revised Oct 16)
PPQ = 10

Aircraft Serial No: _____ **Mk:** **AH1**

Fuel Tank Capacity (lbs, galls, ltrs or kg)			
Tank or Group Number	Main		
Capacity	350 Kg	96 Imp Gall	437 Ltrs

Standard Fuels			
Type	**NATO Code**	**Stores Reference**	**Remarks (temp range etc)**
AVTUR F.S.I.I.	F-34	9130-99-2201036	
	F-40	9130-99-2201037	
AVCAT F.S.I.I.	F-44	9130-99-2201048	Starting maybe difficult when OAT below 0°C

Alternative Fuels			
Type	**NATO Code**	**Stores Reference**	**Remarks (temp range etc)**
AVTUR	F-35	9130-99-9431771	MIN OAT +5°C in flight

Emergency Fuels			
Type	**NATO Code**	**Stores Reference**	**Remarks (temp range etc)**
AVGAS 100LL		9130-99-9100444	1. MAX 25 hrs within ECU life 2. Add max 2% by vol mineral oil 3. Max OAT, ISA +5°C 4. Max pressure alt 6500ft
MT GAS		9130-99-5775825	

Ground Handling Wheel Tyre Pressure	
All Conditions	5 BAR

Radio Active Sources Fitted to Gazelle Aircraft			
Position	**Ref No**	**Isotope**	**Quantity**
Rear Door Jettison Handle	526LE 3384890	H-3 Tritium	2
SRIM 4344 & 4345 - Ultra 4000 Turret Lens		Thorium 232	1
SRIM 4341 - RWSS Turret Lens		Thorium 232	1

Standard Lubricants & Fluids				
System	**Type**	**NATO Code**	**Stores Reference**	**Remarks (temp range etc)**
ECU	OX-7		9150-99-2201938	9.6 Litres
MRG	OEP-70	O-155	9150-99-9100539 or 9150-99-4773152	Use in OAT below -20°C reduces VI - See aircraft RTS
IGB	OEP-70	O-155		
TRGB	OEP-70	O-155		
MRH SLEEVE	OEP-70	O-155		
HYDRAULIC	OM-15	H-515	9150-99-9100572 or 9150-99-2244971	
YAW DAMPER	OM-15	H-515		

Alternative Lubricants				
System	**Type**	**NATO Code**	**Stores Reference**	**Remarks (temp range etc)**
ECU	OX-9	O-148	9150-99-7822627	Mineral & synthetic oils must not in any circumstances be mixed
MRG	OX-27	O-156	9150-99-2251747 or 9150-99-2201940 or 9150-99-2201939	Unrestricted use between +10°C and -30°C
IGB	OX-27	O-156		
TRGB	OX-27	O-156		
MRH SLEEVE	OX-27	O-156		

Miscellaneous		
		Unit Address
Holding Unit Code (HUC)		
Repair Unit Code (RUC)		
SOAP Code		Tel No: Civ/Mil

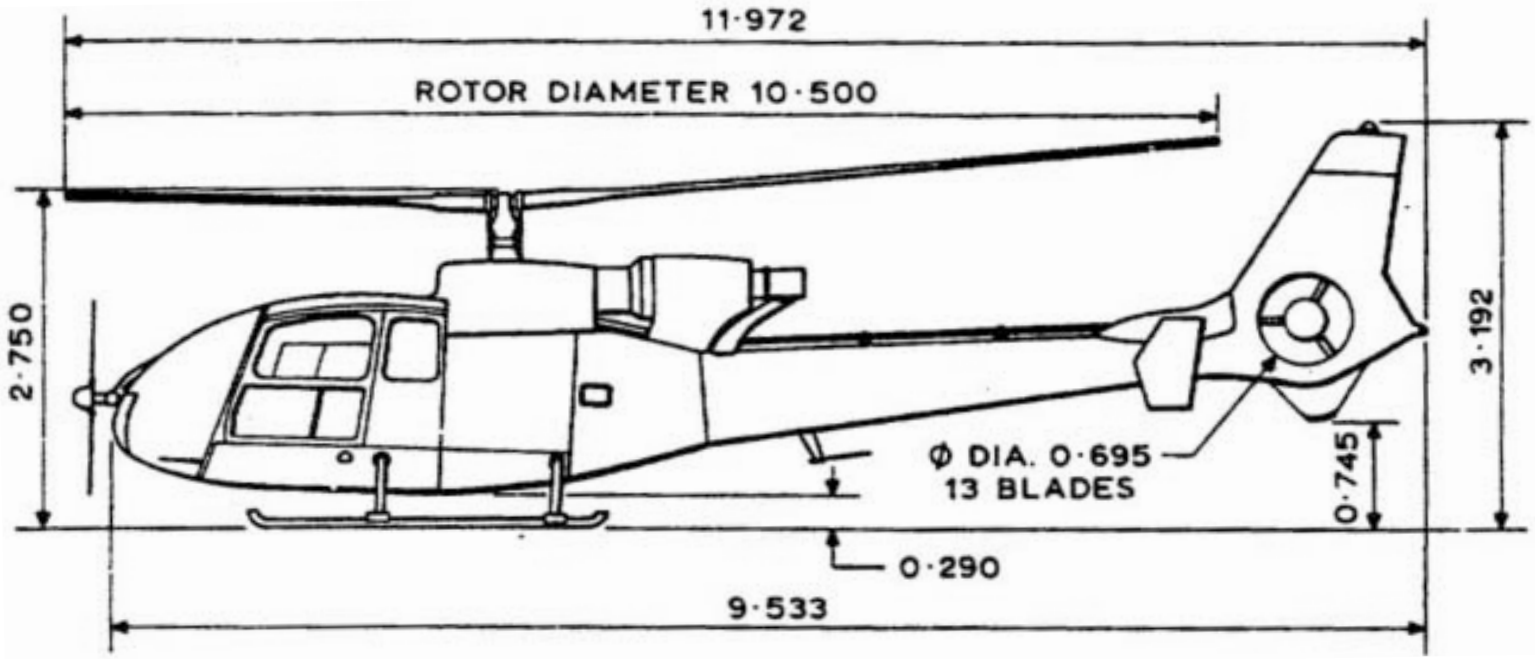

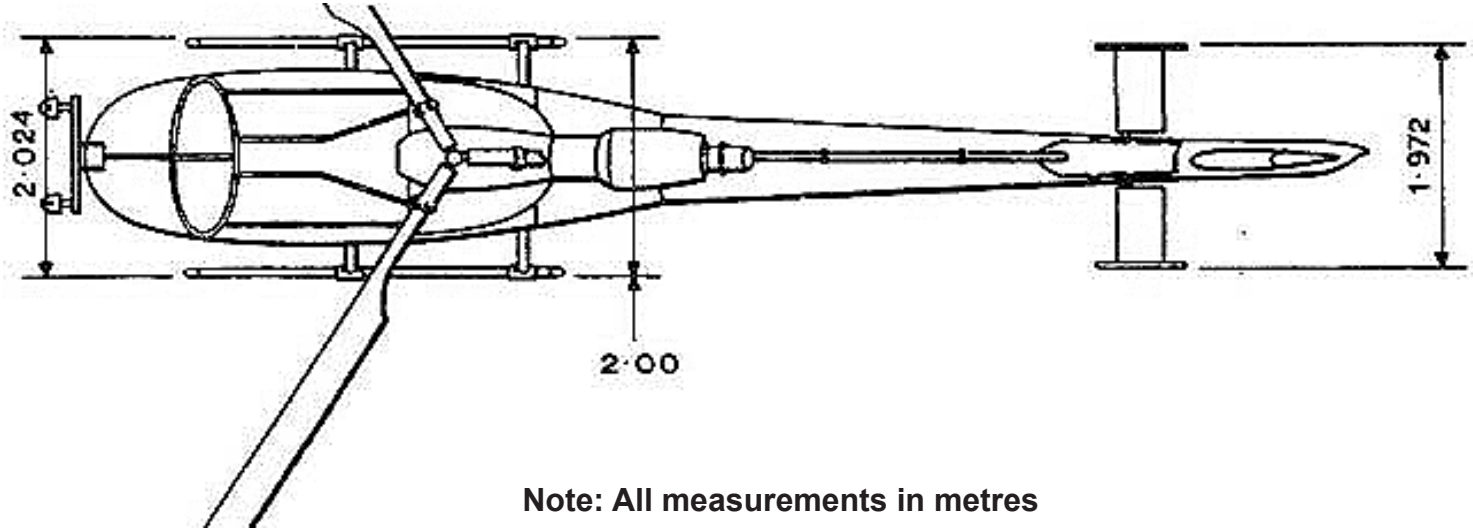

Note: All measurements in metres